SP54D & SP65D Series

Desk-Top, Switch Mode Power Supply
RoHS Compliant, CEC Efficiency Level IV

Features:

- Economy Design
- IEC320-C8 Input
- Over-Voltage Protection
- Short Circuit Protection
- Over-Current Protection
- 100% Burn-In
- 100% Hi-Pot Tested
- RoHS Compliant
- CEC Efficiency Level: IV

Input

Input Voltage	90 to 264 VAC
Input Frequency	47 to 63Hz
Input Current	2.0A Max. @ 100VAC, 1.0A Max. @ 240VAC, Full Load
Safety Ground Leakage Current	0.25mA Max.

Output

Output Voltage & Current	***See Chart***
Ripple & Noise (P-P)	***See Chart***
Over-Voltage Protection	Set at 112% - 132% of Nominal Output Voltage, Auto Recovery
Over-Current Protection	Set at 110% - 150%, Protected to Short Circuit Conditions, Auto Recovery
Temperature Coefficient	± 0.05% / °C Max.

Environmental

Operating Temperature	0°C to 40°C
Storage Temperature	-20°C to 85°C
Relative Humidity	5% to 95% Non-Condensing

Electrical

Efficiency	Meets CEC Level IV Criteria
No Load Power Consumption	≤0.5 Watts
Hold-Up Time	10mS Min.
Line Regulation	±2% Max. at Full Load
Load Regulation	±5% Max. at Full Load
Inrush Current	70A Max. at 110 VAC, 140A Max. at 240 VAC
Withstanding Voltage	3000 VDC from Primary to Secondary Circuit
Insulation Resistance	50 MΩ Min. from Output to Ground
Mean Time Between Failure (MTBF)	100,000 Hours Min., Full Load at 25°C Ambient

Safety

EMI Requirements	Meets Conduction Limits of: (A) FCC Part-15 Class B (B) CISPR-22 Class B
Safety Standards	Meets or Exceeds: (A) UL/c-UL (B) TUV (C) CE (D) CB (E) FCC (F) PSE

apx TECHNOLOGIES INC. HICKSVILLE, NEW YORK • 264 Duffy Avenue Hicksville, NY 11801 • Tel: (516) 433-1313 Fax: (516) 433-1457 • Web: www.apxonline.com Email: sales@apxonline.com • © Copyright 1978 APX Technologies, Inc.

Output Voltage and Current Chart

Model Number**	Output Voltage	Maximum Output Current	Ripple & Noise	Maximum Output Power
SP54D8XXR	8 - 14 VDC	4.50 A	2% Max.	54W
SP65D8XXR	15 - 24 VDC	4.06 A	2% Max.	65W

** To Determine Part Number:

- Repace "XX" with Required Output Voltage (15VDC = "15", 24VDC = "24", etc.)

  Example: SP65D8*24*R indicates a 24VDC Unit.

Note:
Output connector to be specified
Standard Termination is a 6 ft. Cable with 2.5 x 5.5 x 11mm Female Barrel Plug, Center Positive (+).

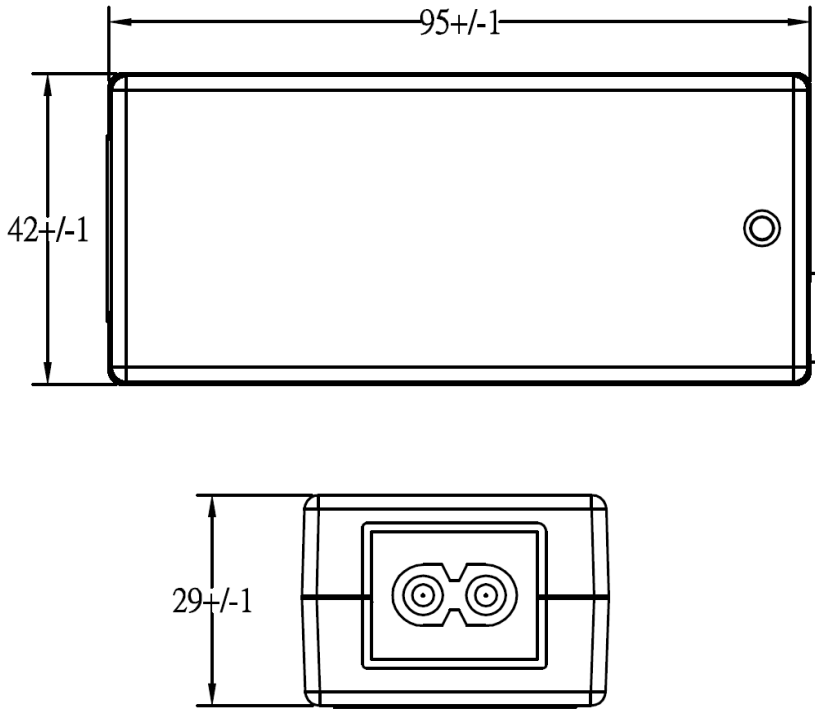

 © Copyright 1978 APX Technologies, Inc.